TMS THE MODAL SHOP, INC.
A PCB GROUP CO.

Product Overview

9100D

Portable Shaker Vibration Calibrator

The Modal Shop
3149 East Kemper Road
Cincinnati, OH 45241
Phone: +1.513.351.9919
Fax: 513.458.2171
info@modalshop.com

Brief Overview

We've taken a successful industrial product, the 9100C Portable Vibration Calibrator, with an outdated design, and run it through the TMS innovation engine. The Modal Shop has engineered market leadership, packaging, performance and precision with state of the art actuation and reliability to create the 9100D.

Benefits:

With improved reference accelerometer and system uncertainty, the new 9100D Portable Vibration Calibrator is ideal for field validation and calibration of an entire measurement channel. Use it to calibrate accelerometers, velocimeters and proximity probes, confirm machine vibration alarm trip points are set properly and ensure end-to-end functionality.

Main benefits are:

- Rugged portability
    - Sturdy shaker element
    - Heavy duty quality and protection of sealed Pelican® brand case
- Simple and elegant usability for the plant floor and beginner metrologists
    - Easy to use interface, with just two dials to adjust frequency and amplitude
    - Improved battery life to last more than 18 hours
- Precision control
    - PCB® industry standard ICP® quartz shear mode reference accelerometer
    - Digital electronics including compact amplifier, including digital data acquisition and innovative closed loop control algorithm for enhanced stability and accuracy

Table of Contents

Introduction 4
Pricing 4
Key Features 5
Suggested Environments and Applications 5
Improvements in New 9100D as Compared to Previous 9100C 6
Technical Comparison to 9100C 7
Engineering Drawing 8
Quickstart Operational Guide 8
Technical Tips 9
Calibration Certificate 10
Supplied Accessories 11
Optional Accessories 11
More Information 12
Contact Information 12

Introduction:

The 9100D Portable Vibration Calibrator (PVC) is the ideal tool for the field check of accelerometers, velocity transducers and proximity probes over a wide operating frequency and amplitude range. With a simple, easy to use interface, the unit is a small, completely self-contained vibration reference source that conveniently validates the entire channel of transducers through measurement, monitoring or recording systems. Packaged in a lightweight, heavy-duty Pelican Storm Case, the 9100D is always ready.

The 9100D neatly and precisely integrates a built-in sine wave generator, power amplifier, electrodynamic shaker, NIST traceable reference accelerometer and digital display. The integral, precision PCB ICP quartz reference accelerometer provides superior stability, while the shaker table is built with robust carbon fiber composite armature flexure supports. The state of the art TMS electronic design, significantly extends battery life and provides closed loop level control for superior quality vibration calibration from 7 Hz to 10 kHz compared with other portable field calibrators.

The 9100D is also available as a K9100D kit configuration. This kit configuration adds a Fluke digital multimeter, additional mounting accelerometer adaptors and a Microsoft Excel spreadsheet macro to create metrology styled calibration certificates.

Pricing:

For pricing and delivery information, please contact your local sales representative. A list of contacts can be found at: http://www.modalshop.com/sales.asp.

Key Features:

- Small and self-contained for in-situ calibration of both accelerometers, velocity sensors and proximity probes
    - Confirm machine vibration alarm trip points are set properly
- Lightweight, industrial Pelican Case dramatically improves durability and portability
- Precision quartz reference accelerometer and conditioning electronics improve uncertainties
- Rugged shaker element design with carbon fiber composite armature flexures
- Increased battery life of up to 18 hours
- Provides NIST traceable transducer verification
- Simple and easy user interface, with only 2 dials and digital display

Suggested Environments and Applications:

- Applications
    - Any industrial customer who relies on sensors and installed instrumentation to protect their assets. In MOST cases the assets cost several (x100 or more) times the cost of a 9100D.
    - Verification and calibration of vibration transducers and related test systems
    - Verification of connector and cabling integrity
    - Verification of speed indicator (*key phasor®) measuring systems
    - Linearity check of proximity probes and vibration pick ups
    - Check alarm, alert trip points in condition monitoring equipment, PLC, DCS or SCADA control systems
- Environments
    - Energy & Power Generation
        - Gas Turbines, Compressors, Oil & Gas, Wind Turbines
    - Process Monitoring & Protection
        - Cooling Towers, Pumps, Reciprocating Machinery, Bearing Condition
    - Predictive Maintenance
        - Gearboxes, Motors, Bearings, Machine Tools
    - Manufacturing operations
    - Most industrial environments

*Key phasor is a registered trademark of GE Energy/Bently Nevada

Improvements in New 9100D as Compared to Previous 9100(C):

- New, rugged industrial Pelican package design greatly improves durability, portability and aesthetics
- Simplified user interface (just two dials instead of multiple potentiometers, buttons and slides) greatly improves control and usability
- The built-in reference accelerometer has been upgraded to a precision PCB quartz ICP accelerometer, the same unit as is installed within the K394A3x series of precision air bearing calibration grade shakers. This reference design improves the stability and accuracy of the 9100D.
- State-of-the-art digital electronics provide superior closed-loop, drift free level and frequency control
- Battery life extended from 5 hours to 18 hours (typical, 100 gram payload at 1 g)
- Low frequency performance greatly improved, with 1 dB accuracy specified down to 10 Hz and operation permitted down to 7 Hz
- Precision amplitude control protects shaker from over travel
- Two rate sensitive dials allow for easy adjustment of frequency and amplitude
- Frequency units displayed in either Hz or CPM, user selectable
- Acceleration units displayed in either peak (pk) or RMS, user selectable (full set of English and Metric units shown in table below)

Frequency	Acceleration (Peak or RMS)	Velocity (Peak)	Displacement (Peak to Peak)
CPM	g pk	in/s pk	mils pk - pk
Hz	g rms	mm/s pk	mm pk - pk
	m/s^2 pk		
	m/s^2 rms		

Units as displayed on the 9100D backlit LCD user interface

Upcoming 9100D features:

- BNC input that allows users to input an external signal to drive the shaker table independent of the 9100C user controls
- BNC output that allows users to output the raw voltage signal from the integral reference accelerometer
- For applications that REQUIRE this functionality , the existing 9100C is still available

KEY: Highlighted items are superior specifications

Technical Comparison:

	9100D		9100C	
GENERAL				
Frequency Range (operating)	7 Hz – 10 kHz	420 - 600 k CPM	10 Hz - 10 kHz	Not Available
Maximum Amplitude (100 Hz, no payload)	20 g pk	196 m/s^2 pk	10g	(98 m/s^2)
	15 in/s pk	380 mm/s pk	6.2 in/s	0.16 m/s
	50 mils pk - pk	1.27 mm pk - pk	19 mil	0.48 mm
ACCURACY OF READOUT				
Acceleration (7 Hz to 10 Hz)	Undefined		Not Operable	
Acceleration (10 Hz to 30 Hz)	±1 dB		Undefined	
Acceleration (30 Hz to 35 Hz)	±3%		Undefined	
Acceleration (35 Hz to 2 kHz)	±3%		±3%	
Acceleration (2 kHz to 10 kHz)	±1 dB		±1 dB	
Velocity (30 Hz to 35 Hz)	±3%		Undefined	
Velocity (35 Hz to 400 Hz)	±3%		±3%	
Velocity (400 Hz to 500 Hz)	±3%		Undefined	
Displacement (30 Hz to 35 Hz)	±3%		Undefined	
Displacement (35 Hz to 150 Hz)	±3%		±3%	
Amplitude Linearity (100 gram load, 100 Hz)	< 1% up to 10 g pk		±1% (100 gram load)	
Waveform Distortion (100 gram load, 30 Hz to 2 kHz)	5%		5% max (100 gram load at 35 Hz - 2 kHz)	
UNITS OF READOUT				
Acceleration	g pk	m/s^2 pk	g pk	m/s^2 pk
	g rms	m/s^2 rms	Not Available	Not Available
Velocity	in/s pk	mm/s pk	in/s pk	mm/s pk
Displacement	mils pk - pk	mm pk - pk	mils pk - pk	mm pk - pk
Frequency	Hz	CPM	Hz	Not Available
POWER REQUIREMENTS				
Internal Battery (Lead Acid)	12 VDC, 4 Amp Hours		12 VDC, 4 Amp Hours	
Operating Battery Life (100 gram payload, 100 Hz 1 g pk)	18 Hours		Undefined (~4 to 5 hour estimate)	
AC Power (for recharging battery)	110 – 240 Volts, 50 - 60 Hz		110 – 240 Volts, 50 - 60 Hz	
TEMPERATURE				
Operating	32° - 122° F	0° - 50° C	32° - 122° F	0° - 50° C
PHYSICAL				
Dimensions (H x W x D)	8.5in x 12in x 11in	22cm x 30cm x 28cm	12in x 7in x 12in	30cm x 18cm x 30cm
Weight	18 lbs	8.2 kg	20 lbs	9.1 kg
Case Material	Pelican® Storm Case		Metal	

Overall Drawing:

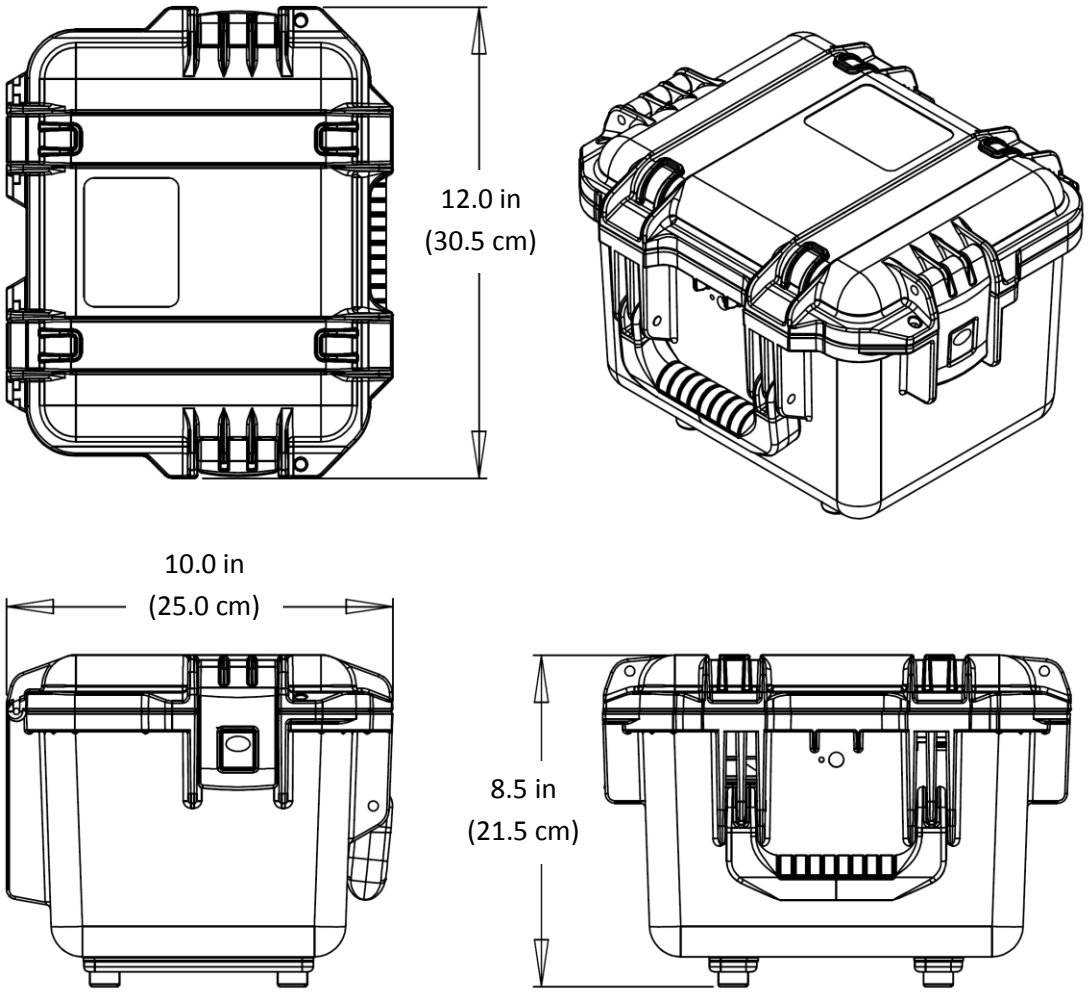

Quickstart Guide:

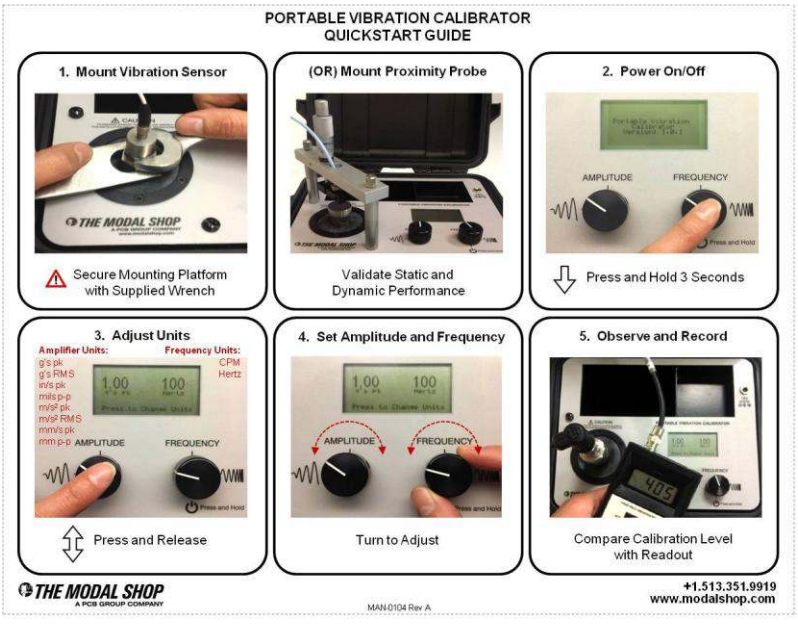

Technical Tips:

Maximum advisable vibration levels are dependent upon the maximum frequency of operation and the payload. The charts that follow show the maximum vibration levels as a function of both frequency and payload. Payloads greater than 300 grams should not exceed the maximum frequencies specified below. Payloads exceeding 800 grams should not be tested on the Model 9100D.

Excessive loads may result in damage to the moving coil and flexure. Care must be taken when testing payloads with large footprints, particularly those with an offset center of gravity. Severe rocking modes can produce high transverse motion and lateral loads on the moving coil and flexure, resulting in damage. When fitting test transducers and fixtures onto the mounting platform, aim to keep the center of gravity directly above, and in line with the center axis of the ¼-28 threaded mounting hole. This is a safeguard against side loading the shaker.

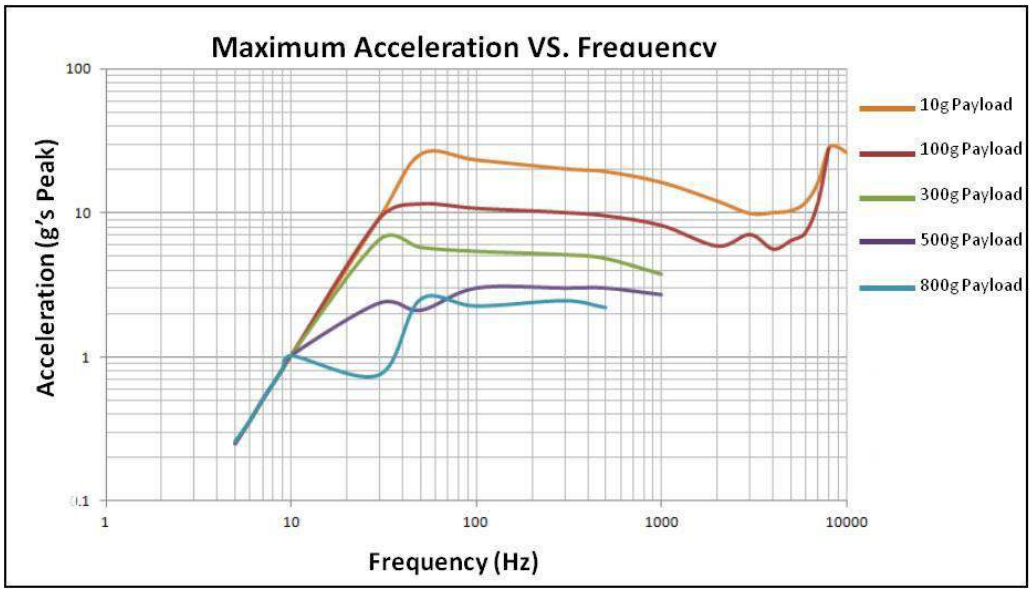

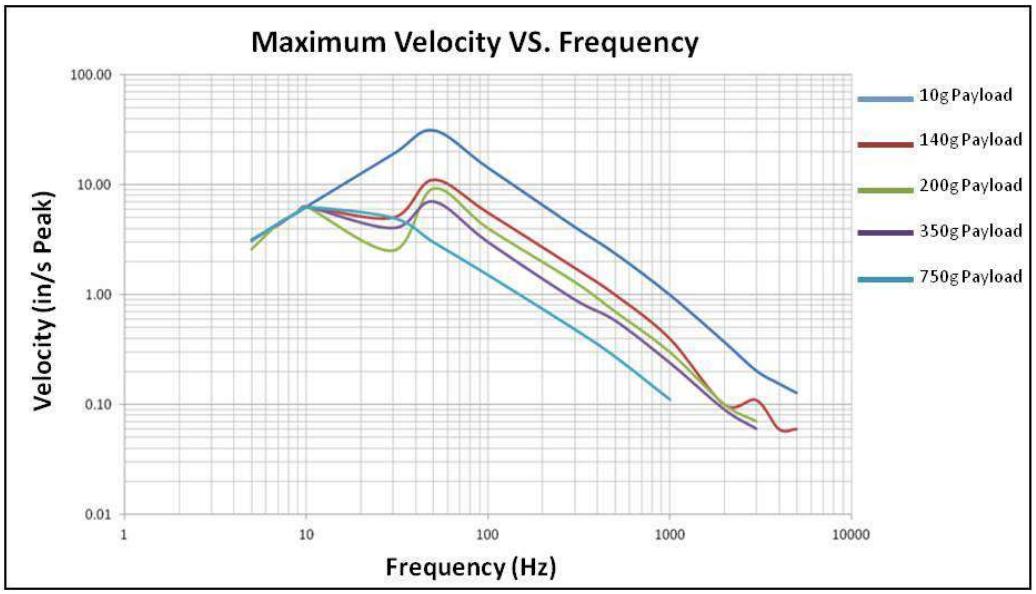

Calibration Certificate (Included):

~Certificate of Calibration~

Manufacturer:	Modal Shop, Inc.		
Model Number:	9100D	**Calibration Date:**	26-Aug-11
Serial Number:	108	**Calibration Due:**	
Test Procedure:	PRD-P240	**Temperature:**	70 °F
Calibration Tech:	BMB	**Humidity:**	50 %
Description:	Portable Vibration Calibrator		
Customer:			

As found: In Tolerance
As left: In Tolerance

Reference Equipment:

Manufacturer	Description	Model Number	Serial Number	Due Date
Agilent	DMM	34401A	C3003	16-Mar-12
PCB	Reference Accel.	353B02	11666	26-Aug-12

Freq (Hz)	Reference Acceleration Level (gpk)	Unit Under Test Acceleration Level (gpk)	% difference
7	0.40	0.35	-13.2%
8	0.51	0.47	-7.6%
9	0.63	0.58	-7.4%
10	1.04	1.00	-3.8%
30	1.01	1.00	-1.3%
50	1.00	1.00	-0.5%
100	1.00	1.00	0.0%
300	1.01	1.00	-0.7%
500	1.00	1.00	-0.5%
1000	1.00	1.00	-0.5%
2000	1.01	1.00	-1.0%
3000	1.01	1.00	-0.6%
4000	1.01	1.00	-0.9%
5000	1.00	1.00	-0.3%
6000	1.01	1.00	-1.0%
8000	1.02	1.00	-2.0%
9000	1.03	1.00	-2.9%
10000	1.03	1.00	-2.5%

Notes:

1. This document certifies that the above meets published specifications.
2. The equipment referenced above has been calibrated using standards traceable to NIST (Project Number 822/271196) and PTB (Project Number 5399). Evidence of traceability is on file at The Modal Shop.
3. The results documented in this certificate relate only to the items tested or calibrated.
4. This certificate may not be reproduced, except in full, without the written consent of The Modal Shop, Inc.

THE MODAL SHOP INC. A PCB GROUP CO.

The Modal Shop Inc.
3149 East Kemper Road
Cincinnati, Ohio 45241
Phone: (513) 351-9919
FAX: (513) 458-2172

PRD-F321 Rev D 9/13/2010

page 1 of 1

Supplied Accessories (Included with 9100D):

Accessories pictured below are included with each 9100D Portable Vibration Calibrator.

Accessory Pouch

Power Supply with Interchangable Plug Adaptors (9100-PS01)

Mounting Wrench

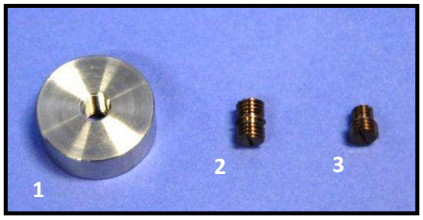

1 – Mounting Pad (080A118)
2 – ¼-28 to ¼-28 Adaptor (081B20)
3 – 10-32 to ¼-28 Adaptor (081A08)

Optional Accessories:

MODEL NUMBER	DESCRIPTION
9100-MNTKIT	Mounting accessory kit for 9100 Series Portable Vibration Calibrators, to adapt to 1/4-28 threaded mounting platforms. Includes studs/inserts (1/4-28, 10-32, 6-32 and 5-40) and bases (for adhesive, magnetic and custom thread patterns).
9105C	Transfer standard reference accelerometer and ICP® sensor signal conditioner, for calibration and system verification of the 9100 Series Portable Vibration Calibrators.
9100-MPPA01	Proximity probe adaptor kit, supports probes with common case threads ranging from M6 to 3/8". Includes Mitutoyo micrometer (metric) and 9100-PPA02 nickel plated 4140 steel target.
9100-PPA01	Proximity probe adaptor kit, supports probes with common case threads ranging from M6 to 3/8". Includes Mitutoyo micrometer and 9100-PPA02 nickel plated 4140 steel target.
9100-PPA02	Target for 9100-PPA01 or 9100MPPA01 proximity probe adaptor kit, nickel plated 4140 steel.
9100-PS01	18 Volt, 1 amp power supply / charger for 9100D Portable Vibration Calibrator, universal 100-240 V, 50/60 Hz.
9100-BAT01	Replacement battery for 9100 Series Portable Vibration Calibrators.

More Information:

- Website: The 9100D appears under the calibration section of the home page of site as "Portable Shaker Vibration Calibrator."
  - http://www.modalshop.com/calibration/Portable-Shaker-Vibration-Calibrator?ID=639
  - K9100D: http://www.modalshop.com/calibration/Portable-Shaker-Vibration-Calibrator Kit?ID=640
  - 9100C: http://www.modalshop.com/calibration/Portable-Vibration-Calibration-System?ID=274
- Trade Shows: The 9100D will be displayed at different TMS and PCB trade shows. Please contact TMS with information regarding upcoming shows.
- The 9100D is also available as an IMI Model 699A06 (http://www.imi-sensors.com)
- Specification Sheets: Available on product webpage
- Datasheet: Available on product webpage
- Manual: Available from TMS
- Quick Start Guide: Available from TMS

Contact Information (Available for sales and technical support):

Rick Bono
The Modal Shop, Inc.
rbono@modalshop.com
Office: +1.513.351.9919

Marco Peres
The Modal Shop, Inc.
mperes@modalshop.com
Office: +1.513.351.9919